CS330-Q370

Desktop

Q370

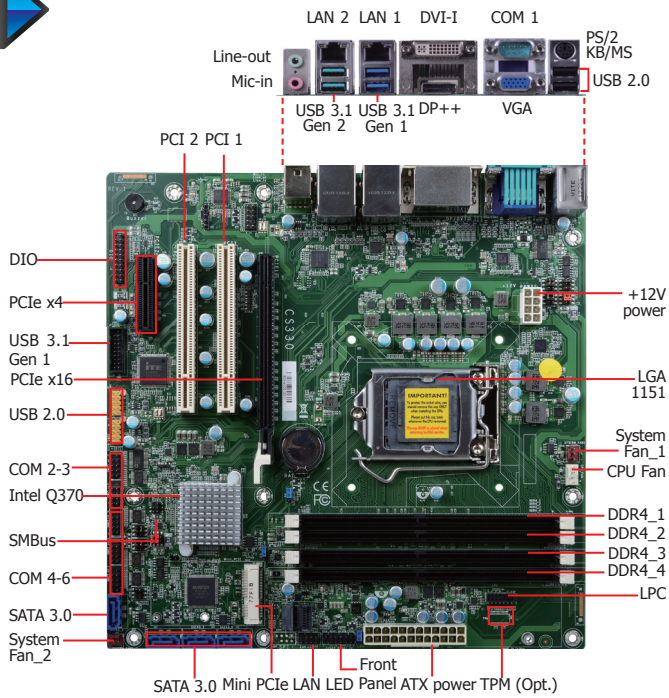

Features

- **4 DDR4 DIMM up to 64GB**
- **Three display ports: VGA, DVI-D, DP++ Supports three independent displays**
- **DP++ resolution up to 4096x2160 @ 60Hz DVI-D resolution up to 1920x1200 @ 60Hz**
- **Multiple expansion: 1 PCIe x16, 1 PCIe x4, 2 PCI, 1 Mini PCIe**
- **Rich I/O: 2 Intel GbE, 6 COM, 2 USB 3.1 Gen 2, 4 USB 3.1 Gen 1, 6 USB 2.0**

Ordering Information

Model Name	P/N	Memory	GbE	RS-232/422/485	RS-232	USB 3.1 Gen 1	USB 3.1 Gen 2	USB 2.0	Power	Thermal	Temp.
CS330-Q370	**770-CS3301-100G**	4 DIMM	2	2	4	4	2	6	24-pin ATX/8-pin ATX 12V	Active	0 to 60°C

Mechanical Drawing

Block Diagram

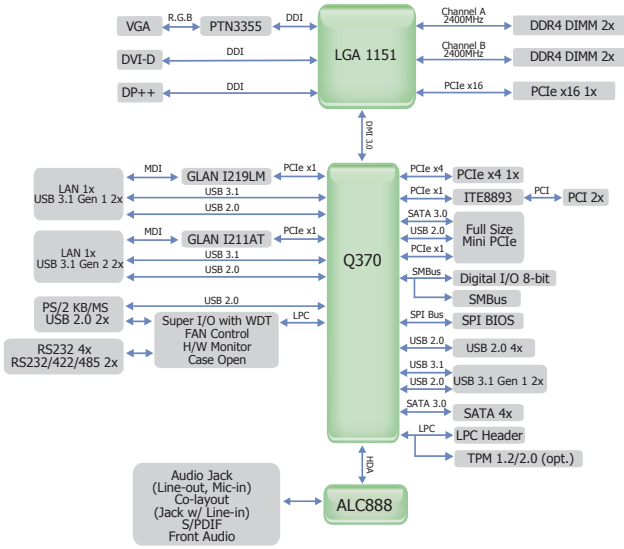

Specifications

SYSTEM	**Processor**	8th Generation Intel® Core™ Processors, LGA 1151 Socket	
	Chipset	Intel® Q370 Chipset	
	Memory	Four 288-pin DIMM up to 64GB	Dual Channel DDR4 2400/2666 MHz
	BIOS	Insyde SPI 128Mbit	
GRAPHICS	**Controller**	Intel® HD Gen 9 Graphics	
	Feature	OpenGL 5.0, DirectX 12, OpenCL 2.1 HW Decode: AVC/H.264, MPEG2, VC1/WMV9, JPEG/MJPEG, HEVC/H265, VP8, VP9 HW Encode: MPEG2, AVC/H264, JPEG, HEVC/H265, VP8, VP9	
	Display	1 x VGA 1 x DVI-I (DVI-D signal) 1 x DP++	VGA: resolution up to 1920x1200 @ 60Hz DVI-D: resolution up to 1920x1200 @ 60Hz DP++: resolution up to 4096x2160 @ 60Hz
	Triple Displays	VGA + DVI-D + DP++	
EXPANSION	**Interface**	1 x PCIe x16 (Gen 3) 1 x PCIe x4 (Gen 3) 2 x PCI	1 x Full-size Mini PCIe (USB/PCIe/mSATA, PCIe by default)
AUDIO	**Audio Codec**	Realtek ALC888	
ETHERNET	**Controller**	1 x Intel® I211AT (10/100/1000Mbps) 1 x Intel® I219LM with iAMT12.0 (10/100/1000Mbps) (only Core i7/i5 supports iAMT)	
REAR I/O	**Ethernet**	2 x GbE (RJ-45)	
	USB	2 USB 3.1 Gen 2 2 USB 3.1 Gen 1 2 USB 2.0	
	Serial	1 x RS-232/422/485 (RS-232 w/ power) (DB-9)	
	PS/2	1 x PS/2 (mini-DIN-6)	
	Display	1 x VGA 1 x DVI-I (DVI-D signal) 1 x DP++	
	Audio	1 x Line-out 1 x Mic-in 1 x Line-in (opt.)	
INTERNAL I/O	**Serial**	1 x RS-232/422/485 (RS-232 w/ power) (2.54mm pitch) 4 x RS-232	
	USB	2 x USB 3.1 Gen 1 (2.00mm pitch) 4 x USB 2.0 (2.54mm pitch)	
	Audio	1 x S/PDIF 1 x Front Audio Header	
	SATA	4 x SATA 3.0 (up to 6Gb/s)	RAID 0/1/5/10
	DIO	1 x 8-bit DIO	
	LPC	1 x LPC	
	SMBus	1 x SMBus	
WATCHDOG TIMER	**Output & Interval**	System Reset, Programmable via Software from 1 to 255 sec/min	
SECURITY	**TPM**	Infineon TPM2.0/1.2 (optional)	
POWER	**Type**	ATX	
	Connector	8-pin ATX 12V power	24-pin ATX power
	Consumption	TBD	
	RTC Battery	CR2032 Coin Cell	
OS SUPPORT		Windows 10 IoT Enterprise	Linux: Ubuntu 18.04
ENVIRONMENT	**Temperature**	Operating: 0 to 60°C	Storage: -40 to 85°C
	Humidity	Operating: 5 to 90% RH	Storage: 5 to 90% RH
	MTBF	TBD	
MECHANICAL	**Dimensions**	microATX form factor	244mm (9.6") x 244mm (9.6")
	Height	PCB: TBD	Top Side: TBD, Bottom Side: TBD

Packing List

• 1 CS330-Q370 motherboard	
• 1 COM port cable (W/Bracket, Length: 300mm, 2 x COM ports)	A81-015026-023G
• 1 Serial ATA data cable (W/LOCK, Length: 500mm)	332-553001-005G
• 1 I/O shield	A49-KD6000-000G
• 1 Screw of Mini PCIE card	531-510180-000G

Optional Items

• USB 2.0 port cable (Length: 350/398mm)	332-253010-026G
• USB 3.1 port cable (Length: 320mm)	A81-001052-023G
• COM port cable (Length: 300mm, 2 x COM ports)	A81-015026-023G
• Serial ATA data cable (Length: 500mm)	332-553001-005G
• Thermal solution (For 35W, Height: 37.3mm)	A71-101107-000G
• Thermal solution (For 65W, Height: 72.8mm)	552-200049-000G
• LPC EXT-RS232 module (4 x RS232 ports)	770-EXTRS1-000G
• LPC EXT-RS485 module (4 x RS485 ports)	770-EXTRS1-100G

DFI reserves the right to change the specifications at any time prior to the product's release. Changes thereafter will be based on the product's revision. Please contact your sales representative for the exact revision offered in your area. All product names mentioned are trademarks of their respective companies. © June 15, 2018 DFI Inc.