EC70A-PTH

Intel® Core™ Ultra processor (Series 3)
Fanless Robust Embedded System



KEY FEATURES

Intel® Core™ Ultra processor (Series 3)

Powered by Intel® Core™ Ultra processor (Series 3) TDP up to 15W

Dual Displays

Supports dual 4K@60Hz displays via HDMI 2.0 and DP 1.4.

Two DDR5 SO-DIMM socket

Up to 128GB DDR5-5600 via dual SO-DIMM sockets, with flexible M.2 expansion (M/B/E keys).

5G Support

Support M.2 B key 3042/3052 5G-NR module

Support OOB

remote Power on/off & reset, BIOS update...etc.

IoT Solutions Alliance

PANEL

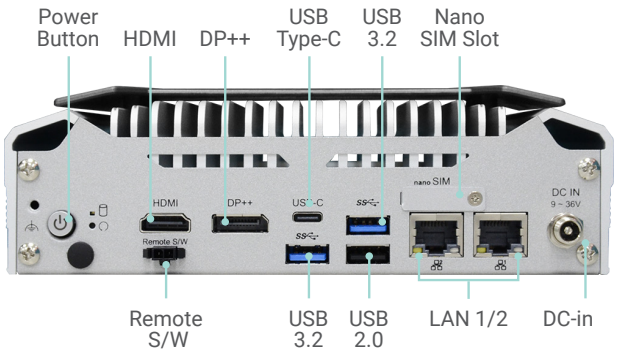

Front View



Rear View

DIMENSIONS

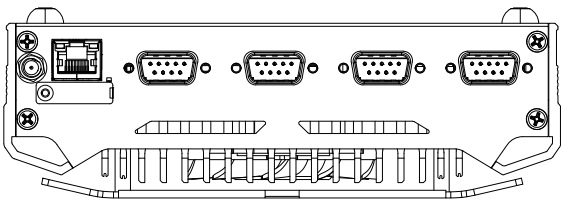

Rear View

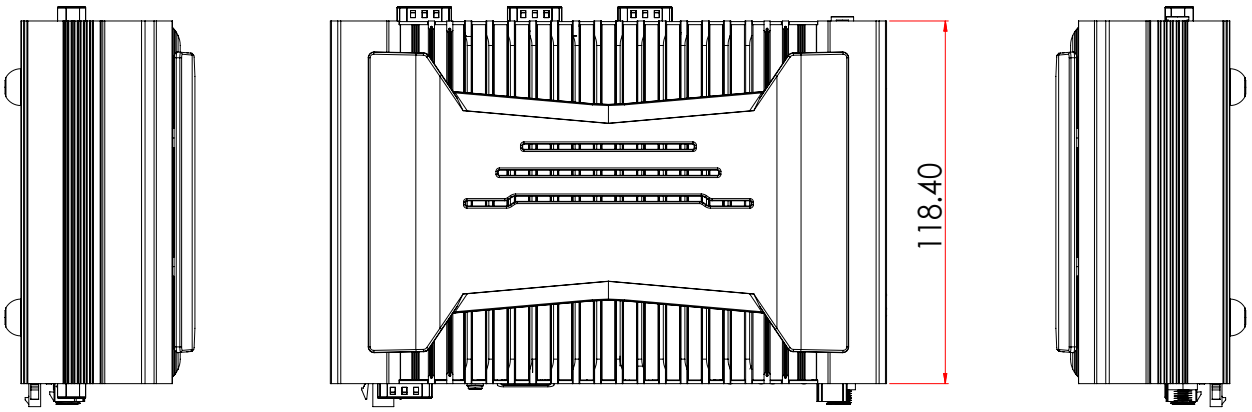

Left View

Right View

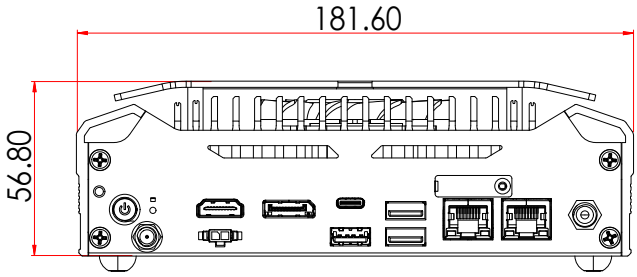

Front View

WALL MOUNTING

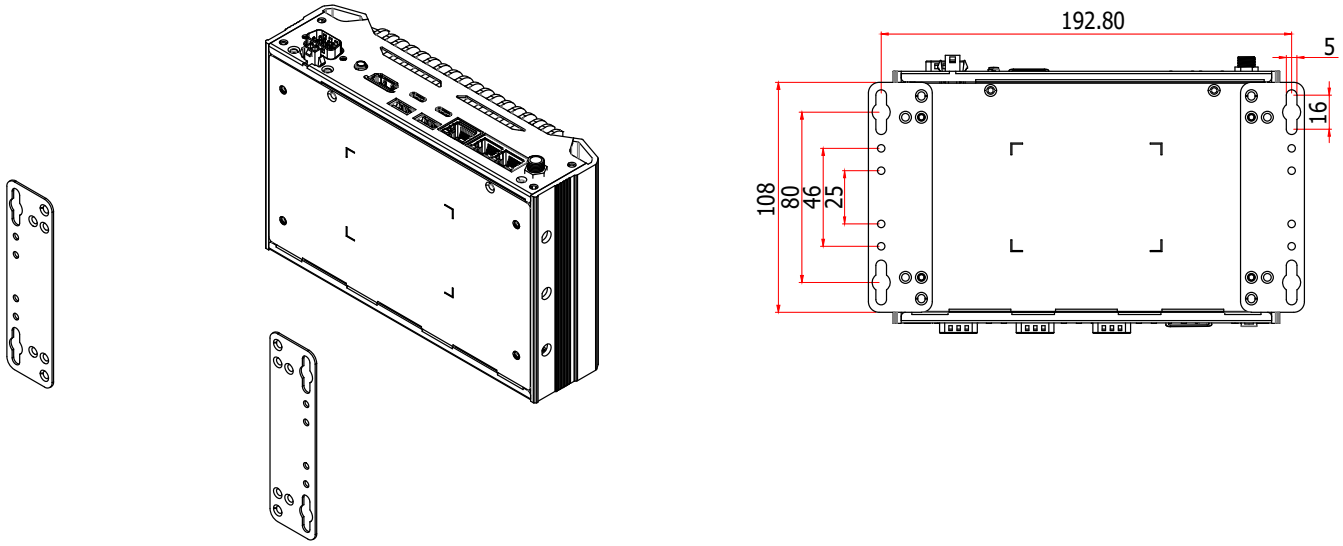

DIN RAIL MOUNTING

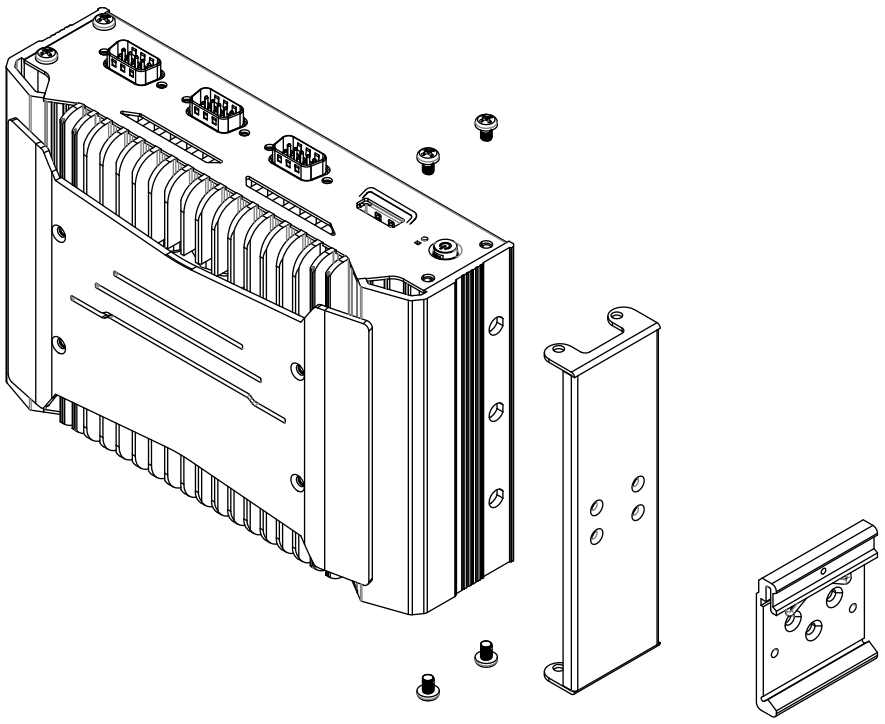

SPECIFICATION

SYSTEM	**Processor**	Intel® Core™ Ultra 7 366HRE (484-4XeET, vPro) Intel® Core™ Ultra 7 365RE (404-4XeET, vPro) Intel® Core™ Ultra 5 336HRE (444-4XeET, vPro) Intel® Core™ Ultra 5 335RE (404-4XeET, vPro)	
	Memory	Dual-channel SODIMM DDR5 up to 6400 MHz (H404)/ 7200 MHz (H484)	
	BIOS	AMI SPI 256Mbit	
GRAPHICS	**Controller**	Intel® Arc Xe^3	
	Display	1 x HDMI 2.0 1 x DP1.4	HDMI: resolution up to 4096x2160 @60Hz DP: resolution up to 4096x2304 @60Hz
	Multiple Displays	HDMI + DP++ + 1 Type-C DP Alt. Mode	
EXPANSION	**Interface**	1 x M.2 M Key 2280 (PCIe x4) 1 x M.2 B Key 3042/3052 (USB 3.0/USB2.0/PCIe x1/SATA), 1 x Nano SIM slot 1 x M.2 E Key 2230 (PCIe/USB 2.0/CNVi)	
ETHERNET	**Controller**	2 x Intel® I226IT (10/100/1000/2500Mbps)	
LED	**Indicators**	1 x Status LED (Green) 1 x HDD LED (Blue)	
FRONT I/O	**Ethernet**	2 x LAN	
	USB	2 x USB 3.2 Gen2 1 x USB 2.0 1 x USB Type-C	
	Display	1 x DP++ 1 x HDMI 1 x Type-C DP Alt. Mode	
	Buttons	1 x Power button 1 x Reset button	
	SIM Slot	1 x Nano SIM slot	
	Power	1 x DC input	
REAR I/O	**Ethernet**	1 x LAN	
	Serial	4 x COM	
	SD	1 x micro SD socket	
WATCHDOG TIMER	**Output & Interval**	System Reset, Programmable via Software from 1 to 255 Seconds	
SECURITY	**TPM**	TPM 2.0	
POWER	**Type**	120W, 24V/5A	
	Connector	DC Jack	
OS SUPPORT	**Microsoft**	Windows 11 IoT Enterprise LTSC 2024	
	Linux	Linux	
ENVIRONMENT	**Operating Temperature**	-20~60°C (CPU TDP 15W, Fanless, with 0.7m/s air flow) -20~70°C (CPU TDP 28W, with Fan)	
	Storage Temperature	-40 to 85°C	
	Relative Humidity	5 to 95% RH (non-condensing)	
MECHANISM	**Construction**	Aluminum + Metal Aluminum	
	Mounting	Wall/VESA/DIN rail mount	
	Dimensions (W x H x D)	181.6mm x 57mm x 118.4mm	
	Weight	1.2 Kg	
STANDARDS AND CERTIFICATIONS	**Shock**	Half sine wave 3G, 11ms, 3 shock per axis	
	Vibration	IEC68-2-64 w/M.2 SSD Condition: -Random: 1Grms @ 5~500 Hz, IEC60068-2-64	
	Certifications	CE, FCC Class A, RoHS, UKCA	

PACKING LIST

1 EC70A-PTH system unit
3 M.2 slot slot screws
4 Foot screws & Rubber Foot
1 Grounding screw
1 Remote switch cable

DFI reserves the right to change the specifications at any time prior to the product's release. Changes thereafter will be based on the product's revision. Please contact your sales representative for the exact revision offered in your area. All product names mentioned are trademarks of their respective companies. © November 19, 2026 DFI Inc.