Quick Installation Guide

KS101P-IRN

10.1" Industrial Touch Panel PC

www.dfi.com



Package Contents

1 x KS101P-IRN System Unit
1 Poron Foam
1 Quick Installation Guide

© September 30, 2026 DFI Inc.

Product Overview

I/O View

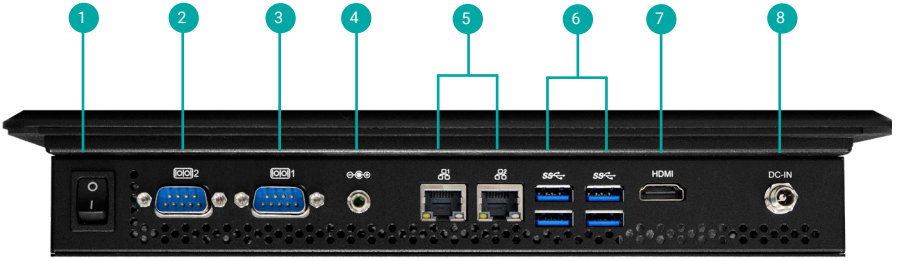

1	Power Button
2	COM2
3	COM1
4	Line-Out
5	2 x GbE (RJ-45)
6	4 x USB3.2
7	HDMI
8	DC-In

Removing the Chassis Cover

Please observe the following guidelines and follow the instructions to open the system.
1. Make sure the system and all other peripheral devices connected to it have been powered off.
2. Disconnect all power cords and cables.

Step 1:

The 8 screws of the system are used to secure the cover to the chassis.

Remove the 4 screws on the bottom of the system, then remove the 2 screws on each side of the system. Keep all removed screws in a safe place for later use.



Step 2:

Lift up the cover to open the system.

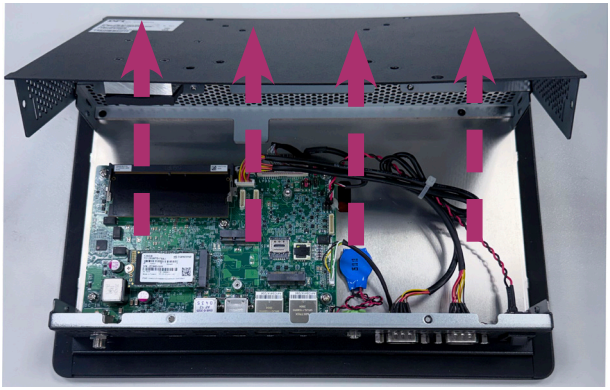

Step 3:

The boards can be easily accessed after the chassis cover is removed.



Installing an M.2 Card

Before installing the M.2 module into the M.2 socket, please make sure that the following safety cautions are well-attended.

1. Make sure the PC and all other peripheral devices connected to it has been powered down.
2. Disconnect all power cords and cables.
3. Locate the M.2 socket on the system board
4. Make sure the notch on card is aligned to the key on the socket.
5. Make sure the standoff screw is removed from the standoff.

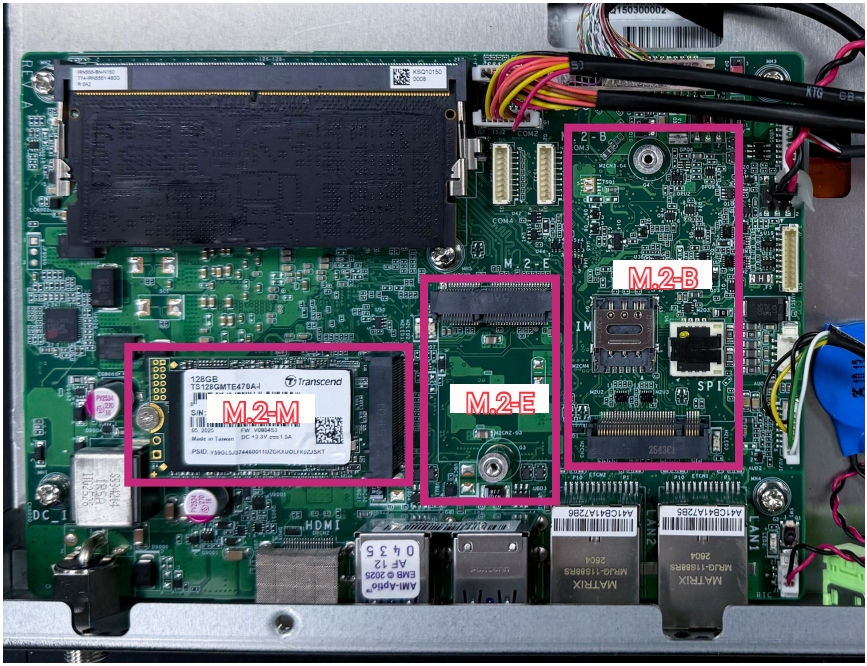

Please follow the steps below to install the card into the socket.

Step 1:

Please follow the steps below to install the card into the socket.
Insert the card into the socket at an angle while making sure the notch and key are perfectly aligned.

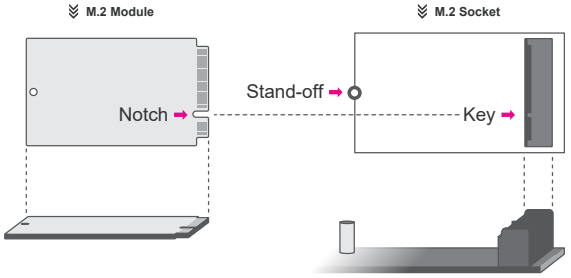

Step 2:

Press the end of the card far from the socket down until against the stand-off.

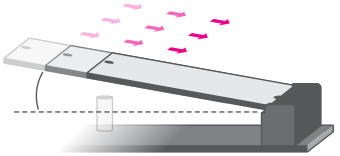

Step 3:

Screw tight the card onto the stand-off with a screw driver and a stand-off screw until the gap between the card and the stand-off closes up. The card should be lying parallel to the board when it's correctly mounted.

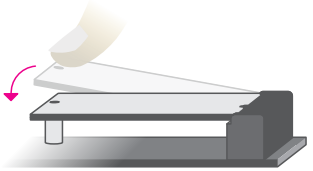

Installing the SO-DIMM Module

Before installing the memory module, please make sure that the following safety cautions are well-attended.

1. Make sure the PC and all other peripheral devices connected to it has been powered down.
2. Disconnect all power cords and cables.
3. Locate the SO-DIMM socket on the system board
4. Make sure the notch on memory card is aligned to the key on the socket.

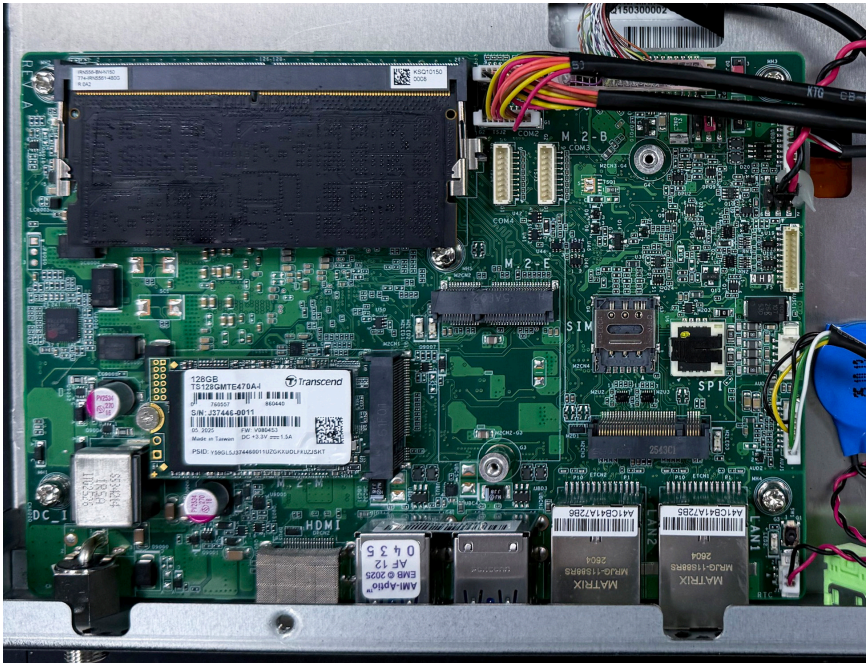

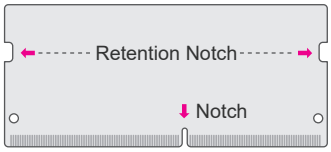

DDR5 SO-DIMM

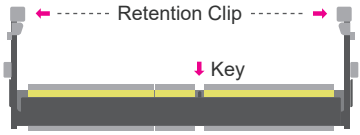

Socket Top View

Please follow the steps below to install the memory card into the socket.

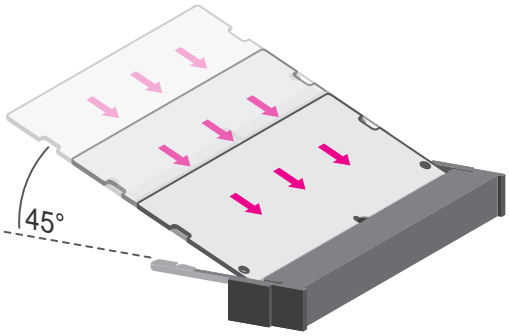

Step 1:
Insert the memory card into the slot while making sure 1) the notch and the key are aligned, and 2) the non-connector end rises approximately 45 degrees horizontally. Press the card firmly into the socket while applying and maintaining even pressure on both ends.

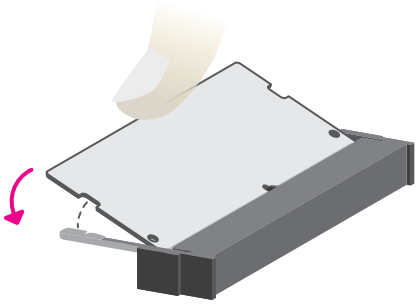

Step 2:
Press the end of the card far from the socket down while making sure the retention notch and the clip align as indicated by the dotted line in the illustration. If the retention notch and the clip do not align, please remove the card and re-insert it. Press the card all the way down.

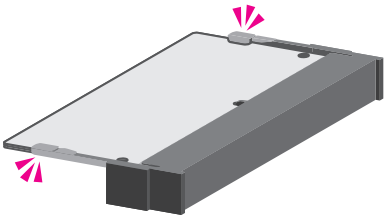

Step 3:
The clips snap automatically and abruptly to the retention notches of the card sounding a distinctive click, and lock the card in place. Inspect that the clip sits in the notch. If not, please pull the clips outward, release and remove the card, and mount it again.

Mounting Options

VESA Mount

Step 1:

Select a place on the wall where you will mount the Panel PC.

Step 2:

Use the provided mounting screws to attach **wall mount bracket 1** onto the wall.

Step 3:

Attach the other bracket (**wall mount bracket 2**) to the rear of the Panel PC.

Step 4:

Slide the Panel PC to **wall mount bracket 1** and attach the two brackets together with the hooks. Then tighten the screw to secure the assembly in place.

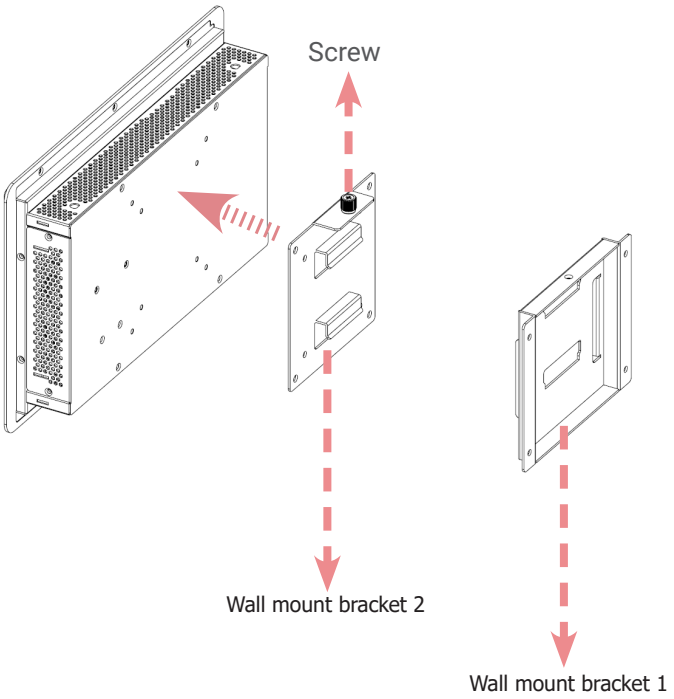

Panel Mount

Step 1:

Select a place on the panel (or wall) where you will mount the Panel PC.

Step 2:

Cut out a shape on the panel that corresponds to the Panel PC's rear dimensions (272mm x 169mm) and ensure that the Panel PC can be fitted into the panel properly.

The flat panel thickness is less than 3mm. Be sure to route or trim down the thick wall to 3 mm or slightly less for the clamps to recess and be compatible with your wall or enclosure.

Step 3:

Insert the Panel PC from the outside surface of the panel into the mounting hole until it is properly fitted against the panel.

Step 4:

Position the mounting clamps along the rear edges of the Panel PC and insert them into the slits around the Panel PC.

Step 5:

The first and second clamps must be positioned and secured diagonally prior to mounting the rest of the clamps. Tighten the clamp's screw using an electric screwdriver by pressing the white plastic cap onto the back of the panel. The illustration below shows that all clamps are properly mounted.

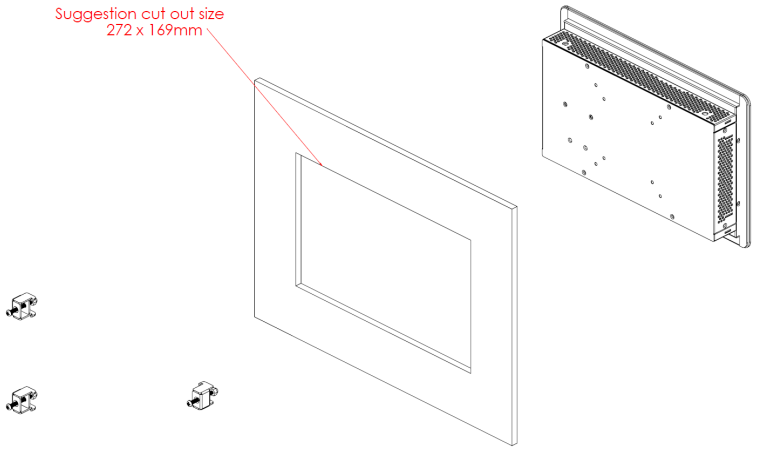

DFI reserves the right to change the specifications at any time prior to the product's release. This QR may be based on the product's revision. For more documentation and drivers, please visit the download page at www.dfi.com/downloadcenter, or via the QR codes to the right.