Board Layout

Top View

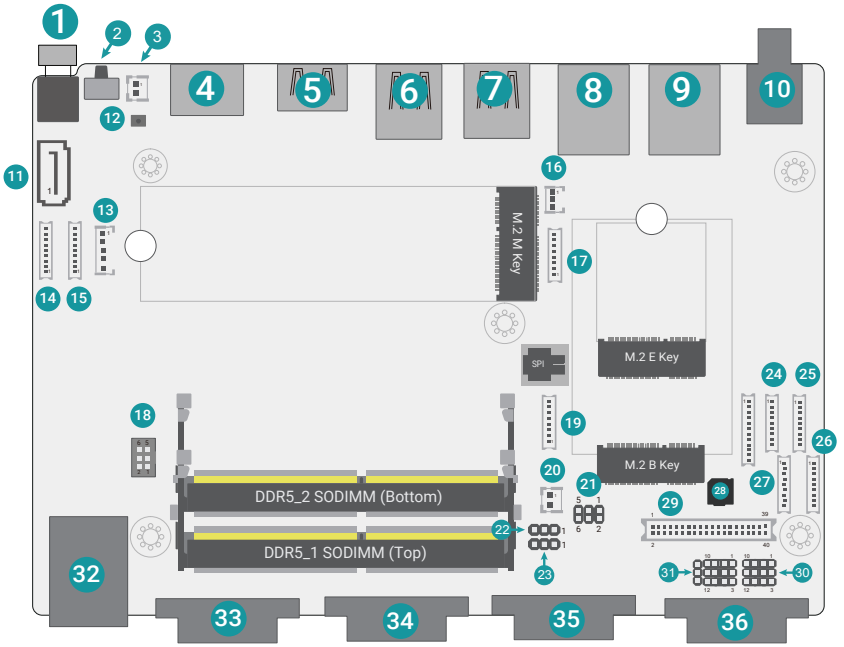

© November 10, 2026 DFI Inc.

Bottom View

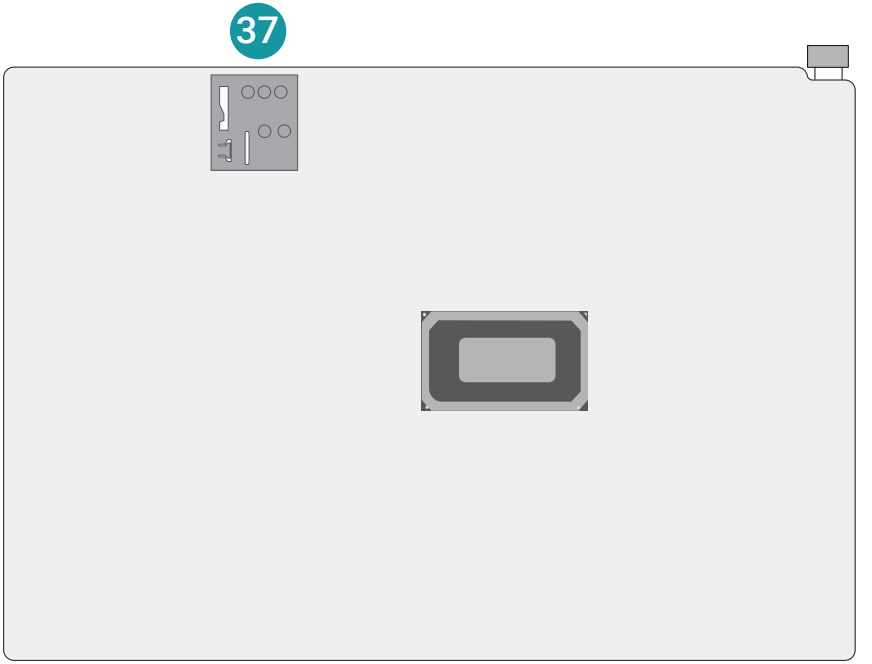

1. Power Button
2. Reset Button
3. RTC Battery
4. HDMI
5. DP
6. ▲USB3.2
▼USB Type C
7. ▲USB2.0
▼USB3.2
8. LAN2
9. LAN1
10. DC-in
11. SATA0
12. Clear CMOS
13. SATA Power
14. COM6
15. COM5
16. Fan
17. USB2.0
18. Front Panel
19. CAN BUS
20. CASE OPEN
21. Panel Power Selection
22. Backlight Selection
23. Inverter Power Selection
24. COM2
25. COM1
26. COM3
27. COM4
28. Buzzer
29. LVDS/eDP (opt.)
30. COM4/DIO Selection (TSJP1)
31. COM4/DIO Selection (TSJP2)
32. LAN3
33. COM 1 (RS232/422/485)
34. COM 2 (RS232)
35. COM 3 (RS232)
36. COM 4 (RS232/422/485) or 8-bit DIO
37. Nano SIM Slot

Jumper Settings

22 Backlight Selection	DPJP1
3.3V (Default)	1-2 On
5V	2-3 On

23 Inverter Power Selection	DPJP2
12V (Default)	1-2 On
5V	2-3 On

21 Panel Power Selection	DPJP3
12V	1-2 On
5V	3-4 On
3.3V (Default)	5-6 On

30 31 COM4/DIO Selection	TSJP1 & TSJP2
COM	Connect to both TSJP1 & TSJP2 : 1-2, 4-5, 7-8, 10-11 On
DIO	Connect to both TSJP1 & TSJP2 : 2-3, 5-6, 8-9, 11-12 On

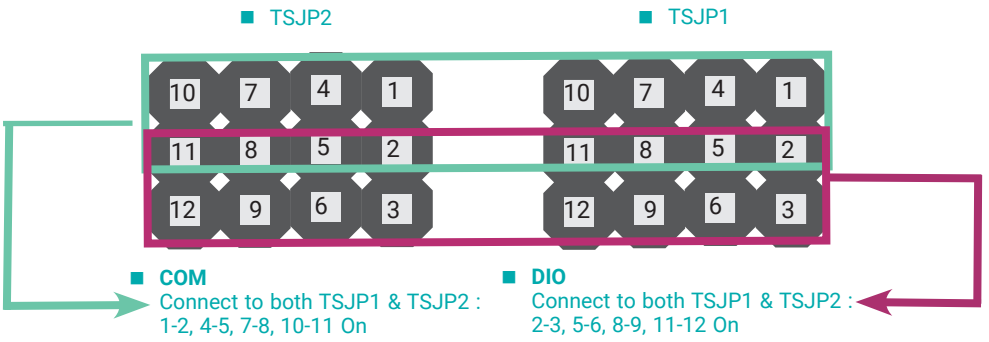

PIN Assignment

3 ▶ RTC Battery (CN7)

Pin	Assignment
1	A_VBAT
2	GND

20 ▶ CASE OPEN (CN11)

Pin	Assignment
1	CASEOPEN#
2	GND

16 ▶ Fan (CN12)

Pin	Assignment
1	RPM
2	12V_FAN
3	GND

11 ▶ SATA (J7)

Pin	Assignment
1	GND
2	TXP
3	TXM
4	GND
5	RXM
6	RXP
7	GND

13 ▶ SATA Power (J6)

Pin	Assignment
1	5V
2	5V
3	12V
4	GND
5	GND

19 ▶ CAN BUS (J8)

Pin	Assignment
1	5V
2	CAN1H
3	CAN1L
4	GND
5	5V
6	CAN2H
7	CAN2L
8	GND

18 ▶ Front Panel (J2)

Pin	Assignment	Pin	Assignment
1	PWR_BTN	2	3V3
3	GND	4	SUS_LED#
5	SYS_RST	6	HD_LED#

17 ▶ USB2.0 (UBCN4)

Pin	Assignment	Pin	Assignment
1	5V	2	USB2_1N
3	USB2_1P	4	GND
5	5V	6	USB2_2N
7	USB2_2P	8	GND

25 ▶ COM1 (TSCN1)

Pin	Assignment	Pin	Assignment
1	MDCD-	2	MSIN-
3	MSO-	4	MDTR-
5	GND	6	MDSR-
7	MRTS-	8	MCTS-
9	MRI-	10	NC

24 ▶ COM2 (TSCN2)

Pin	Assignment	Pin	Assignment
1	MDCD-	2	MSIN-
3	MSO-	4	MDTR-
5	GND	6	MDSR-
7	MRTS-	8	MCTS-
9	MRI-	10	NC

26 ▶ COM3 (TSCN3)

Pin	Assignment	Pin	Assignment
1	MDCD-	2	MSIN-
3	MSO-	4	MDTR-
5	GND	6	MDSR-
7	MRTS-	8	MCTS-
9	MRI-	10	NC

27 ▶ COM4 (TSCN4)

Pin	Assignment	Pin	Assignment
1	MDCD-	2	MSIN-
3	MSO-	4	MDTR-
5	GND	6	MDSR-
7	MRTS-	8	MCTS-
9	MRI-	10	NC

15 ▶ COM5 (TSCN5)

Pin	Assignment	Pin	Assignment
1	MDCD-	2	MSIN-
3	MSO-	4	MDTR-
5	GND	6	MDSR-
7	MRTS-	8	MCTS-
9	MRI-	10	NC

14 ▶ COM6 (TSCN6)

Pin	Assignment	Pin	Assignment
1	MDCD-	2	MSIN-
3	MSO-	4	MDTR-
5	GND	6	MDSR-
7	MRTS-	8	MCTS-
9	MRI-	10	NC

30 31 ▶ DB9-COM4 Pins Customization (TSJP1 &TSJP2)

Connect to TSJP1 (pin 2, ,5, 8, 11) & TSJP2 (pin 2, ,5, 8, 11) if there is internal signal communication request via DB9-COM4 connector without I/O shield changed.

TSJP2		DB9-COM4
2	-->	6
5	-->	7
8	-->	8
11	-->	9

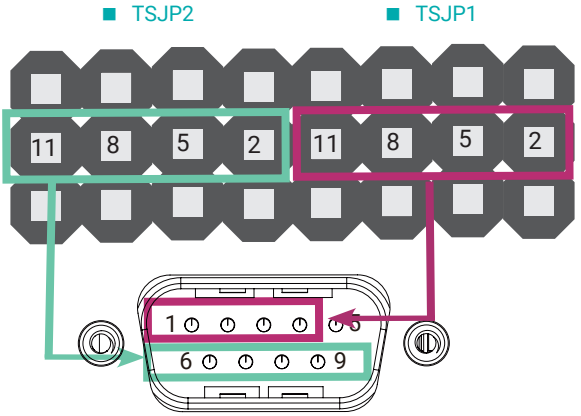

TSJP1		DB9-COM4
2	-->	1
5	-->	2
8	-->	3
11	-->	4

30 ▶ COM4 / DIO (TSJP1)

Pin	Assignment
1	MDCD4-
2	TSCN10_pin1
3	DI_0
4	MSIN4
5	TSCN10_pin2
6	DI_1
7	MSOUT4
8	TSCN10_pin3
9	DI_2
10	MDTR4-
11	TSCN10_pin4
12	DI_3

31 ▶ COM4 / DIO (TSJP2)

Pin	Assignment
1	MDSR4-
2	TSCN10_pin6
3	DO_0
4	MRTS4-
5	TSCN10_pin7
6	DO_1
7	MCTS4-
8	TSCN10_pin8
9	DO_2
10	MRI4-
11	TSCN10_pin9
12	DO_3

29 ▶ LVDS/eDP (opt.) (DPCN1)

Pin	Assignment	Pin	Assignment
1	INV_PWR	2	INV_PWR
3		4	
5		6	GND
7	LVDS_3V3	8	
9	VCC_PANEL_PWR	10	VCC_PANEL_PWR
11	LVDS_DDC_CLK	12	LVDS_DDC_DATA
13	DIMMING	14	PVCCEN
15	BLONOFF	16	eDP_HPD_CON
17	LVDSA_LANE0_N	18	LVDSA_LANE0_P
19	LVDSA_LANE1_N	20	LVDSA_LANE1_P
21	LVDSA_LANE2_N	22	LVDSA_LANE2_P
23	LVDSA_CLK_N	24	LVDSA_CLK_P
25	LVDSA_LANE3_N	26	LVDSA_LANE3_P
27	GND	28	GND
29	eDP_LVDSB_LANE0_N	30	eDP_LVDSB_LANE0_P
31	eDP_LVDSB_LANE1_N	32	eDP_LVDSB_LANE1_P
33	LVDSB_LANE2_N	34	LVDSB_LANE2_P
35	eDP_LVDSB_CLK_N	36	eDP_LVDSB_CLK_P
37	LVDSB_LANE3_N	38	LVDSB_LANE3_P
39	GND	40	GND

DFI reserves the right to change the specifications at any time prior to the product's release. This QR may be based on the product's revision. For more documentation and drivers, please visit the download page at www.dfi.com/downloadcenter, or via the QR codes to the right.