ASL9A2

Intel® Atom® Processor Amston Lake Series
COM Express® Mini

IoT Solutions Alliance

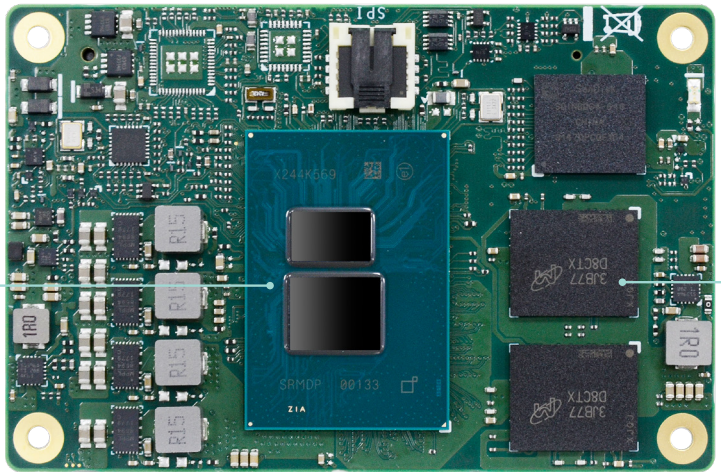

Top View

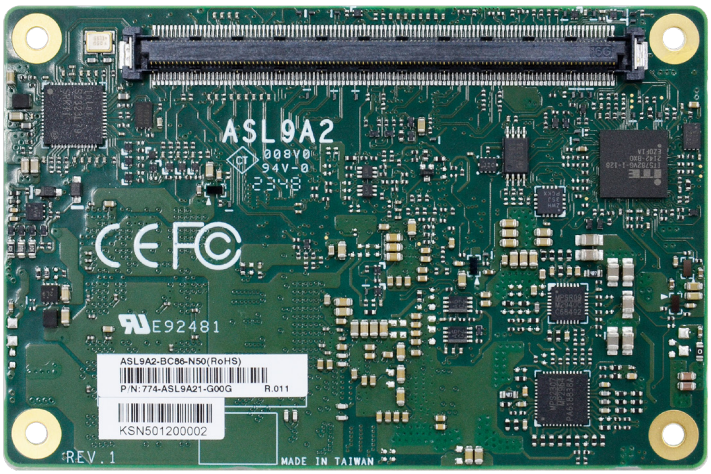

Bottom View

KEY FEATURES

DDR5

LPDDR5-4800 up to 16GB

4K High Resolution

Supports 4K/ 2K resolution

High Speed Ethernet

Supports 100M/1000M/2.5Gbps

Multiple Expansion

4 PCIe x1, 1 SMBus, 1 I^2C, 1 eMMC

Rich I/O

2 USB 3.2, 8 USB 2.0

BLOCK DIAGRAM

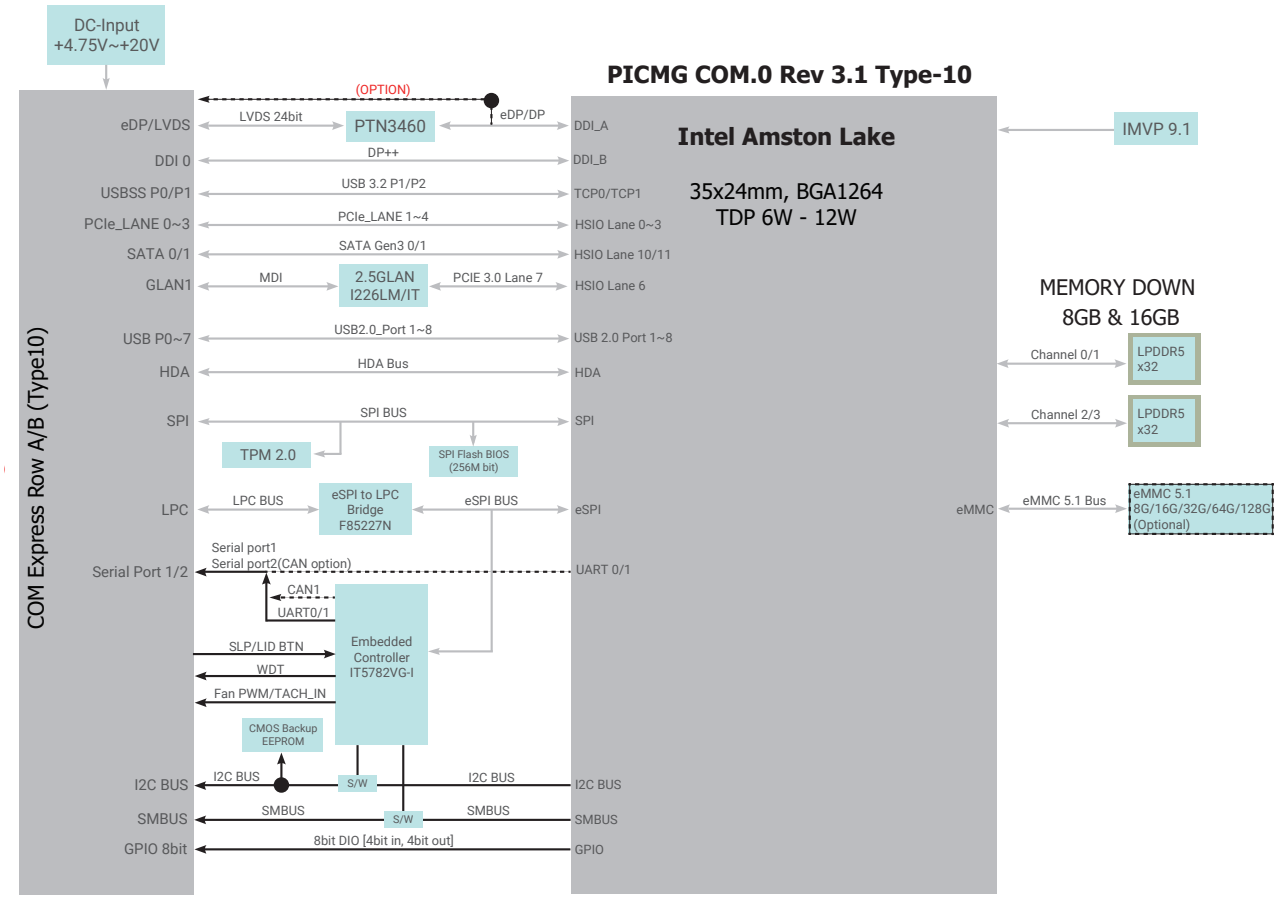

MECHANICAL DRAWING

TOP
Limit H=7mm

BOTTOM
Limit H=3.5mm

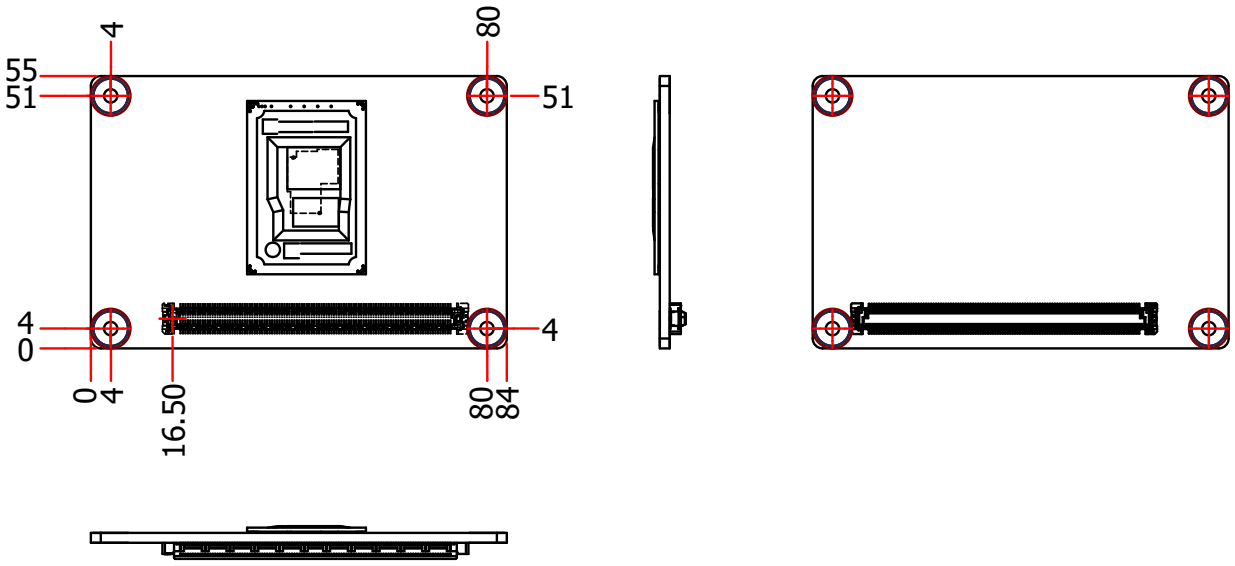

SPECIFICATION

SYSTEM	**Processor**	Intel® Atom x7000RE series processors (Code Name : Amston Lake) Intel® Atom Processor x7835RE, 8 Cores, 1.3~3.6GHz, 12W Intel® Atom Processor x7433RE, 4 Cores, 1.5~3.4GHz, 9W Intel® Atom Processor x7211RE, 2 Cores, 1.0~3.2GHz, 6W
	Memory	LPDDR5 up to 16GB Dual Channel LPDDR5 4800MHz 8GB/16GB supported by project basis. In-band ECC (IBECC) Supported by all CPU SKUs
	BIOS	AMI SPI 256Mbit
GRAPHICS	**Controller**	Intel® UHD
	Feature	Open GL 4.6, DirectX 12.1 Vulkan 1.2 (Windows) Mesa 3D, Open GL 4.6, Vulkan 1.2 (Linux) **HW Decode:** 4K60 10b 4:2:0, 4:4:4 HEVC/VP9/SCC, 4K60 10b 4:2:0 AV1 **HW Encode:** 4K60 10b 4:2:0, 4:4:4 HEVC/VP9/SCC
	Display	1 x DDI 1 x LVDS/eDP **LVDS:** single channel 24-bit, resolution up to 1920x1200 @ 60Hz **eDP:** resolution up to 4096x2160 @ 60Hz **HDMI:** resolution up to 4096x2160 @ 30Hz **DP++:** resolution up to 4096x2160 @ 60Hz, 3840x2160 @60Hz
	Dual Displays	DDI + LVDS/eDP
EXPANSION	**Interface**	4 x PCIe x1 (Gen 3) 1 x I^2C 1 x SMBus 1 x LPC 2 x UART (TX/RX) 1 x CAN bus (available upon request)
AUDIO	**Interface**	HD Audio
ETHERNET	**Controller**	1 x Intel® I226-IT / I226-LM (10/100/1000Mbps/2.5Gbps)
I/O	**USB**	2 x USB 3.2 Gen2 8 x USB 2.0
	SATA	2 x SATA 3.0 (up to 6Gb/s)
	eMMC	1 x 8GB/16GB/32GB/64GB/128GB eMMC 5.1 (available upon request)
	DIO	1 x 8-bit DIO
WATCHDOG TIMER	**Output & Interval**	System Reset, Programmable via Software from 1 to 255 Seconds
SECURITY	**TPM**	dTPM or fTPM (Optional)
POWER	**Type**	4.75V~20V, 5VSB, VCC_RTC (ATX mode) 4.75V~20V, VCC_RTC (AT mode)
	Consumption	TBD
OS SUPPORT	**OS Support (UEFI Only)**	Windows 11/10 IoT Enterprise 64-bit Linux
ENVIRONMENT	**Temperature**	**Operating:** -40 to 85°C **Storage:** -40 to 85°C
	Humidity	**Operating:** 5 to 90% RH **Storage:** 5 to 90% RH
	MTBF	TBD
MECHANISM	**Dimensions**	COM Express® Mini 84mm (3.3") x 55mm (2.16")
	Compliance	PICMG COM Express® R3.1, Type 10
STANDARDS AND CERTIFICATIONS	**Certifications**	CE, FCC

ORDERING INFORMATION

Model Name	P/N	CPU	Memory	eMMC	LVDS/eDP	TPM 2.0	Thermal	Operating Temp.
ASL9A2-TC16-7835RE	770-ASL9A22-000G	Intel® Atom Processor x7835RE, 8 Cores, 12W	16GB	64GB	eDP	N/A	Cooler	-40 to 85°C
ASL9A2-TC16-7433RE	770-ASL9A22-100G	Intel® Atom Processor x7433RE, 4 Cores, 9W	16GB	64GB	eDP			
ASL9A2-TC86-7211RE	770-ASL9A22-300G	Intel® Atom Processor x7211RE, 2 Cores, 6W	8GB	64GB	LVDS			

PACKING LIST

Cooler	A71-108305-000G

OPTIONAL ITEMS

Heat Spreader	A71-808364-000G
COM335 Carrier Board Kit	770-CM3351-000G

DFI reserves the right to change the specifications at any time prior to the product's release. Changes thereafter will be based on the product's revision. Please contact your sales representative for the exact revision offered in your area. All product names mentioned are trademarks of their respective companies. © April 28, 2025 DFI Inc.