IoT Solutions Alliance

PR611-C621

Server-grade

C621

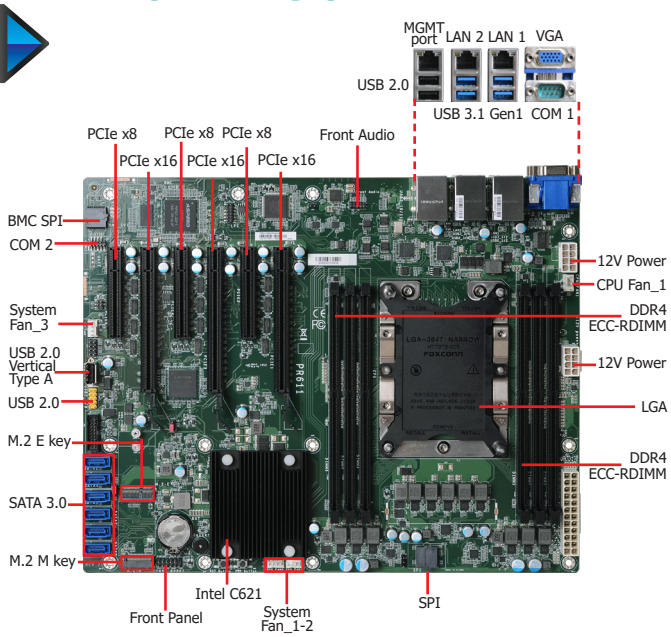

Features

- 6 DDR4 ECC-RDIMM up to 384GB
- Multiple expansion: 3 PCIe x16, 3 PCIe x8 (share w/ PCIe x16), 2 M.2
- Rich I/O: 2 Intel GbE, 1 COM, 6 SATA 3, 5 USB 2.0, 6 USB 3.1 Gen1

Ordering Information

Model Name	P/N	GbE	RS-232	USB 3.1 Gen1	USB 2.0	VGA	IPMI-Mgnt	TPM	Temp.
PR611-C621DRI	770-PR6111-000G	2	1	6	5	1	1	0	-5~65°C
PR611-C621DR	770-PR6111-100G	2	1	6	5	0	0	0	-5~65°C
PR611-C621DRI	770-PR6111-200G	2	1	6	5	1	1	1	-5~65°C
PR611-C621DR	770-PR6111-300G	2	1	6	5	0	0	1	-5~65°C
PR611-C621DR	770-PR6111-400G	2	1	6	5	1	0	1	-5~65°C

Mechanical Drawing

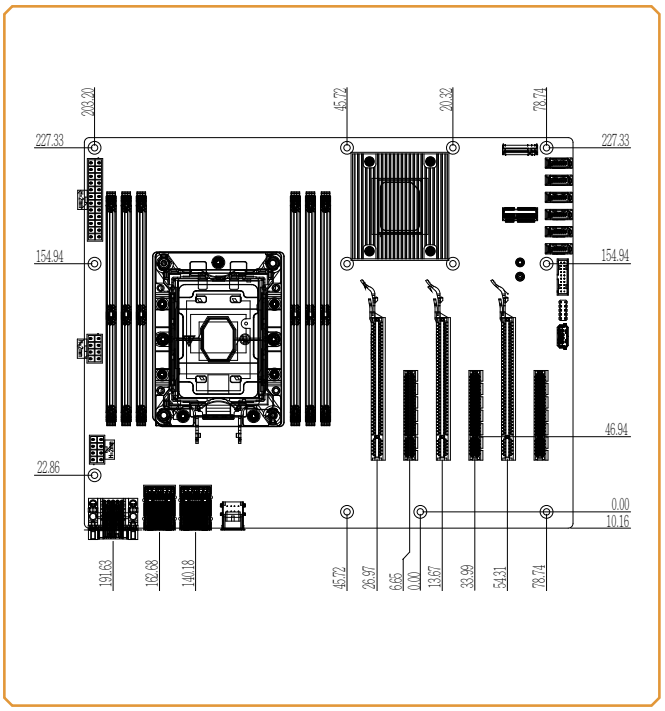

Block Diagram

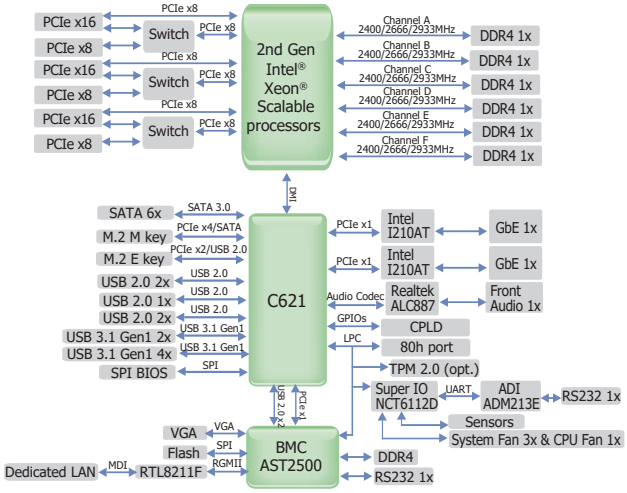

Specifications

SYSTEM	**Processor**	1st Generation Intel® Xeon® Scalable Processor Family, LGA 3647 Socket, TDP upto 165W: Intel® Xeon® Platinum 8160T (24 Cores, 27.5M Cache, up to 3.7 GHz); 150W Intel® Xeon® Gold 6138T (20 Cores, 27.5M Cache, up to 3.7 GHz); 125W Intel® Xeon® Gold 6138 (20 Cores, 27.5M Cache, up to 3.7 GHz); 125W Intel® Xeon® Gold 6130T (16 Cores, 22M Cache, up to 3.7 GHz); 125W Intel® Xeon® Gold 6130 (16 Cores, 22M Cache, up to 3.7 GHz); 125W Intel® Xeon® Gold 6126T (12 Cores, 19.25M Cache, up to 3.7 GHz); 125W Intel® Xeon® Gold 6126 (12 Cores, 19.25M Cache, up to 3.7 GHz); 125W Intel® Xeon® Gold 5120T (14 Cores, 19.25M Cache, up to 3.2 GHz); 105W Intel® Xeon® Gold 5119T (14 Cores, 19.25M Cache, up to 3.2 GHz); 85W Intel® Xeon® Gold 5118 (12 Cores, 16.5M Cache, up to 3.2 GHz); 105W Intel® Xeon® Silver 4116T (12 Cores, 16.5M Cache, up to 3.0 GHz); 85W Intel® Xeon® Silver 4116 (12 Cores, 16.5M Cache, up to 3.0 GHz); 85W Intel® Xeon® Silver 4114T (10 Cores, 13.75M Cache, up to 3.0 GHz); 85W Intel® Xeon® Silver 4110 (8 Cores, 11M Cache, up to 3.0 GHz); 85W Intel® Xeon® Silver 4109T (8 Cores, 11M Cache, up to 3.0 GHz); 70W Intel® Xeon® Bronze 3106 (8 Cores, 11M Cache, 1.7 GHz); 85W 2nd Generation Intel® Xeon® Scalable Processor Family, LGA 3647 Socket, TDP upto 165W: Intel® Xeon® Gold 6252N (24 Cores, 35.75M Cache, up to 3.6 GHz); 150W Intel® Xeon® Gold 6238T (22 Cores, 30.25M Cache, up to 3.7 GHz); 125W Intel® Xeon® Gold 6230T (20 Cores, 27.5M Cache, up to 3.9 GHz); 125W Intel® Xeon® Gold 6230N (20 Cores, 27.5M Cache, up to 3.5 GHz); 125W Intel® Xeon® Gold 6230 (20 Cores, 27.5M Cache, up to 3.9 GHz); 125W Intel® Xeon® Gold 6226 (12 Cores, 19.25M Cache, up to 3.7 GHz); 125W Intel® Xeon® Gold 5220T (18 Cores, 24.75M Cache, up to 3.9 GHz); 105W Intel® Xeon® Gold 5218T (16 Cores, 22M Cache, up to 3.8 GHz); 105W Intel® Xeon® Gold 5218N (16 Cores, 22M Cache, up to 3.7 GHz); 110W Intel® Xeon® Gold 5215 (10 Cores, 13.75M Cache, up to 3.4 GHz); 85W Intel® Xeon® Silver 4216 (16 Cores, 22M Cache, up to 3.2 GHz); 100W Intel® Xeon® Silver 4215 (8 Cores, 11M Cache, up to 3.5 GHz); 85W Intel® Xeon® Silver 4214 (12 Cores, 16.5M Cache, up to 3.2 GHz); 85W Intel® Xeon® Silver 4210 (10 Cores, 13.75M Cache, up to 3.2 GHz); 85W Intel® Xeon® Silver 4209 (8 Cores, 11M Cache, up to 3.2 GHz); 70W	
	Chipset	Intel® C621 Chipset	
	Memory	6 x 288-pin ECC-RDIMM up to 384GB Single Channel DDR4 up to 2933 MHZ	Support Optane DC persistent memory module(DCPMM) in DIMM3 and DIMM6 (2nd Gen Xeon Scalable (62xx/52xx/4215) processors only)
	BIOS	Insyde SPI 128Mbit	
Graphics	**Display**	1 x VGA (opt.)	
	Single Displays	VGA (opt.)	
EXPANSION	**Interface**	3 x PCIe x16 (Gen 3) 3 x PCIe x8 (Gen 3)(share w/ PCIe x16) 1 x M.2 M key 2280 (SATA/PCIe Gen3 x4 NVMe) 1 x M.2 E key 2230 (USB 2.0/PCIe Gen3 x2) Note: PCIe x8 slot is OPEN edge.	
AUDIO	**Audio Codec**	ALC887	
ETHERNET	**Controller**	2 x Intel® I210AT PCIe (10/100/1000Mbps) IPMI: RTL8211F (opt.)	
REAR I/O	**Ethernet**	2 x GbE (RJ-45) 1 x dedicated IPMI LAN (opt.)	
	USB	4x USB 3.1 Gen1 2x USB 2.0 stack (opt.w/ RJ45+USB2.0 stack)	
	Serial	1 x RS-232 (DB-9)	
INTERNAL I/O	**USB**	2x USB 2.0 header (2x USB 2.0) 1x USB 2.0 vertical Type A 1x USB 3.1 Gen1 header (2x USB 3.1 Gen1)	
	SATA	6 x SATA 3.0 (up to 6Gb/s)	RAID 0/1/5/10
	SMBus	1 x SMBus	
WATCHDOG TIMER	**Output & Interval**	System Reset, Programmable via Software from 1 to 255 sec/Min	
SECURITY	**TPM**	TPM 2.0 (opt.)	
POWER	**Type**	ATX	
	Connector	8-pin ATX 12V power	24-pin ATX power
	Consumption	Idle: Xeon Gold 5218 - 3.3V @ 0.06A (0.198Watt); 5V @ 1.75A (8.75Watt); 12V @ 1.67A (20.04Watt) Max.: Xeon Gold 5218 - 3.3V @ 0.08A (0.264Watt); 5V @ 2.94A (14.7Watt); 12V @ 11.53A (138.36Watt) Idle: Xeon Platinum 8276M - 3.3V @ 0.03A (0.099Watt); 5V @ 1.65A (8.25Watt); 12V @ 1.63A (19.56Watt) Max.: Xeon Platinum 8276M - 3.3V @ 0.05A (0.165Watt); 5V @ 2.65A (13.25Watt); 12V @ 18.43A (221.16Watt)	
	RTC Battery	CR2032 Coin Cell	
OS SUPPORT		Windows 10 IoT Enterprise LTSB RS5(64-bit) Windows Server 2019 Windows Server 2016	Linux
ENVIRONMENT	**Temperature**	Operating: -5 to 65°C	Storage: -40 to 85°C
	Humidity	Operating: 5 to 90% RH, Non-condensing	Storage: 5 to 90% RH, Non-condensing
	MTBF	PR611-C621: 558,025 hrs @ 25°C; 339,879 hrs @ 45°C ; 224,136 hrs @ 60°C PR611-C621 w/ IPMI-Mgnt: 510,709 hrs @ 25°C; 306,113 hrs @ 45°C ; 200,130 hrs @ 60°C Calculation Model: Telcordia Issue 4 Environment: GB, GC - Ground Benign, Controlled	
MECHANICAL	**Dimensions**	ATX Form Factor	305mm (12") x 244mm (9.6")
	Height	PCB: 1.6mm	Top Side: 37.34mm

Packing List

• 1 PR611-C621 motherboard	
• 1 I/O shield	A49-PR6110-020G
• 2 M.2 screw	A32-112016-041G
• 1 CPU Clip	348-436471-100G

Optional Items

• USB 2.0 port cable (Length: 350mm)	A81-001066-016G
• Cooler (Narrow ILM LGA 3647)	A71-101400-000G
• USB 3.1 Gen1 cable (Length: 320mm)	A81-001052-023G
• Serial ATA data cable (Length: 500mm)	332-553001-005G

DFI reserves the right to change the specifications at any time prior to the product's release. Changes thereafter will be based on the product's revision. Please contact your sales representative for the exact revision offered in your area. All product names mentioned are trademarks of their respective companies. © August 13, 2025 DFI Inc.